Work Order ID 67678

Tuesday, March 29, 2011 11:16:17 AM

Item ID: D3197-041
Revision ID:
Item Name: Bar Assembly

Accept

Setup **Start**
Stop

Start Date: 3/29/2011 **Start Qty:** 4.00
Required Date: 4/1/2011 **Req'd Qty:** 4.00
Reference:

Cust Item ID:
Customer:

Run **Start**
Stop

Approvals: **Process Plan:** M **Date:** 11-03-29 **Tooling:** _____ **Date:** _____
QC: _____ **Date:** _____ **SPC (Y/N):** _____ **Date:** _____

Draw Nbr	Revision Nbr
D3197	Rev B

Sequence ID/ Work Center ID	Operation Description	Set Up/ Run Hours	Tool ID	Tool #	Plan Code	Accept Qty	Reject Qty	Reject Number	Insp. Stamp
100 Bandsaw Jeaspa Bandsaw	BAND SAW **Memo** Cut blanks: 29.125" long	0.00 0.00	B.A 11/04/05			4	ϕ		
110 HAAS 1 HAAS CNC vertical machine #1	HAAS CNC VERTICAL MACHINING #1 **Memo** 1-Face ends to lenght per dwg D3197□2-Machine D3197-1 as per Folio FA340 and Dwg D3197□3-Deburr	0.00 0.00	B.A 11/04/05			4	ϕ		
120 QC Quality Control	QC2- Inspect parts off machine FAI/FAIB **Memo**	0.00 0.00	B.A 11/04/05			4	ϕ		

Dart Aerospace Ltd

W/O:		WORK ORDER CHANGES					
DATE	STEP	PROCEDURE CHANGE	By	Date	Qty	Approval Chief Eng / Prod Mgr	Approval QC Inspector

Part No: _____ **PAR #:** _____ **Fault Category:** _____ **NCR:** Yes No **DQA:** _____ **Date:** _____

Resolution: _____ **Disposition:** _____ **QA: N/C Closed:** _____ **Date:** _____

NCR:		WORK ORDER NON-CONFORMANCE (NCR)						
DATE	STEP	Description of NC Section A	Corrective Action Section B			Verification Section C	Approval Chief Eng	Approval QC Inspector
			Initial Chief Eng	Action Description Chief Eng	Sign & Date			

NOTE: Date & initial all entries

H:\FORMS\Quality Assurance\approved QA\NCRWO RevE

Work Order ID 67678

Tuesday, March 29, 2011 11:16:17 AM

Item ID: D3197-041 **Accept** **Setup Start**

Revision ID: **Stop**

Item Name: Bar Assembly

Start Date: 3/29/2011 **Start Qty:** 4.00 **Cust Item ID:**

Required Date: 4/1/2011 **Req'd Qty:** 4.00 **Customer:**

Reference:

Approvals: **Process Plan:** _____ **Date:** _____ **Tooling:** _____ **Date:** _____ **Run Start**

QC: _____ **Date:** _____ **SPC (Y/N):** _____ **Date:** _____ **Stop**

Sequence ID/ Work Center ID	Operation Description	Set Up/ Run Hours	Tool ID	Tool #	Plan Code	Accept Qty	Reject Qty	Reject Number	Insp. Stamp
130		0.00							
Lathe Conv	CONVENTIONAL LATHE					4	ϕ		
Conventional Lathe	**Memo** Chamfer as per Dwg D3197	0.00	B.A 11/04/06						
140	QC8- Inspect parts - second check	0.00							
QC	**Memo**	0.00	11/04/06			4	ϕ		
Quality Control									
150	Chemical Conversion Coat per QSI005 4.1	0.00							
HandFinish	**Memo**	0.00				4	BR 11-4-6.		
Hand Finishing									

Dart Aerospace Ltd

W/O:		WORK ORDER CHANGES					
DATE	STEP	PROCEDURE CHANGE	By	Date	Qty	Approval Chief Eng / Prod Mgr	Approval QC Inspector

Part No: _____ **PAR #:** _____ **Fault Category:** _____ **NCR:** Yes No **DQA:** _____ **Date:** _____

Resolution: _____ **Disposition:** _____ **QA: N/C Closed:** _____ **Date:** _____

NCR:		WORK ORDER NON-CONFORMANCE (NCR)						
DATE	STEP	Description of NC Section A	Corrective Action Section B			Verification Section C	Approval Chief Eng	Approval QC Inspector
			Initial Chief Eng	Action Description Chief Eng	Sign & Date			

NOTE: Date & initial all entries

H:\FORMS\Quality Assurance\approved QA\NCRWO RevE

Work Order ID 67678

Tuesday, March 29, 2011 11:16:17 AM

Item ID: D3197-041 **Accept** **Setup Start**
Revision ID: **Stop**
Item Name: Bar Assembly

Start Date: 3/29/2011 **Start Qty:** 4.00 **Cust Item ID:**
Required Date: 4/1/2011 **Req'd Qty:** 4.00 **Customer:**
Reference:

Run Start
Stop

Approvals: **Process Plan:** _____ **Date:** _____ **Tooling:** _____ **Date:** _____
QC: _____ **Date:** _____ **SPC (Y/N):** _____ **Date:** _____

Sequence ID/ Work Center ID	Operation Description	Set Up/ Run Hours	Tool ID	Tool #	Plan Code	Accept Qty	Reject Qty	Reject Number	Insp. Stamp
160	Grey Sandtex(Ref:4.3.5.6) per QSI005 4.3	0.00							
Powdercoat	M115128					4		11-4-6	
	Memo	0.00							
Powder Coating	START TIME: 1:40. ☐OVEN TEMPERATURE: 320° ☐FINISH TIME: 2:10								
170	QC3- Inspect Part Finish	0.00							
QC						4	0	11/04/06	
	Memo	0.00							
Quality Control									
180		0.00							
Small Fab	Small Fab								
	Memo	0.00							
Small Fab	Assemble D3197-041 as per Dwg D3197								

11/04/18 (4)

Dart Aerospace Ltd

W/O:		WORK ORDER CHANGES					
DATE	STEP	PROCEDURE CHANGE	By	Date	Qty	Approval Chief Eng / Prod Mgr	Approval QC Inspector

Part No: _____ **PAR #:** _____ **Fault Category:** _____ **NCR:** Yes No **DQA:** _____ **Date:** _____

Resolution: _____ **Disposition:** _____ **QA: N/C Closed:** _____ **Date:** _____

NCR:		WORK ORDER NON-CONFORMANCE (NCR)						
DATE	STEP	Description of NC Section A	Corrective Action Section B			Verification Section C	Approval Chief Eng	Approval QC Inspector
			Initial Chief Eng	Action Description Chief Eng	Sign & Date			

NOTE: Date & initial all entries

H:\fFORMS\Quality Assurance\approved QA\NCRWO RevE

Work Order ID 67678

Tuesday, March 29, 2011 11:16:17 AM

Item ID: D3197-041
Revision ID:
Item Name: Bar Assembly

Accept

Setup Start
Stop

Start Date: 3/29/2011 **Start Qty:** 4.00
Required Date: 4/1/2011 **Req'd Qty:** 4.00
Reference:

Cust Item ID:
Customer:

Run Start
Stop

Approvals: **Process Plan:** _____ **Date:** _____ **Tooling:** _____ **Date:** _____
QC: _____ **Date:** _____ **SPC (Y/N):** _____ **Date:** _____

Sequence ID/ Work Center ID	Operation Description	Set Up/ Run Hours	Tool ID	Tool #	Plan Code	Accept Qty	Reject Qty	Reject Number	Insp. Stamp
190	QC5- Inspect part completeness to step on W/O	0.00							
QC	Memo	0.00							
Quality Control									
200	Identify as per dwg & Stock Location: 096	0.00							
Packaging	Memo	0.00							
Packaging									
210	QC21- Final Inspection - Work Order Release	0.00							
QC	Memo	0.00							
Quality Control									

11/4/19

11-04-19

Dart Aerospace Ltd

W/O:		WORK ORDER CHANGES					
DATE	STEP	PROCEDURE CHANGE	By	Date	Qty	Approval Chief Eng / Prod Mgr	Approval QC Inspector

Part No: _____ **PAR #:** _____ **Fault Category:** _____ **NCR:** Yes No **DQA:** _____ **Date:** _____

Resolution: _____ **Disposition:** _____ **QA: N/C Closed:** _____ **Date:** _____

NCR:		WORK ORDER NON-CONFORMANCE (NCR)						
DATE	STEP	Description of NC Section A	Corrective Action Section B			Verification Section C	Approval Chief Eng	Approval QC Inspector
			Initial Chief Eng	Action Description Chief Eng	Sign & Date			

NOTE: Date & initial all entries

Picklist Print

Tuesday, March 29, 2011 11:16:40 AM

2

Work Order ID: 67678

Parent Item: D3197-041

Parent Item Name: Bar Assembly

Start Date: 3/29/2011 **Required Date:** 4/1/2011

Start Qty: 4.00 **Required Qty:** 4.00

Comments: IPP Rev: A New Issue 05-11-08 JLM
IPP Rev:B As per Rev B 06-03-10 JLM

Component Item ID/ Item Name	Replacement Item ID	Mfg/ Purch	Bin Item	Primary Location	Last Location	Route Seq ID	Unit of Measure	Qty on Hand	Qty per Kit	Total Qty	Qty Issued	Date Issued	Status
MS27039-1-24		Purchased	No			100	Each	130.0000	2	8		11/04/18	
Screw													
				Location			**Loc Qty**		**Loc Code**				
				ST292			130						
					100151		130			8			
AN960JD10	NAS1149D0363J	Purchased	No			180	Each	0.0000	6	24		11/04/18	
Washer													
D2690-5		Manufactured	No			180	Each	19.0000	2	8		11/04/18	
Lanyard Assembly													
				Location			**Loc Qty**		**Loc Code**				
				ST020			19						
					66820		19			8			
D3242-1		Manufactured	No			180	Each	12.0000	2	8		11/04/18	
Tag													
				Location			**Loc Qty**		**Loc Code**				
				ST044			12						
					65390		12			8			
D3489-3-200		Manufactured	No			180	Each	5.0000	2	8		11/04/19	
PIP PIN													
				Location			**Loc Qty**		**Loc Code**				
				ST062			5						
					67042		5			5			

4D M116583 (24x)

B68563 (3x)

Dart Aerospace Ltd

W/O:		WORK ORDER CHANGES					
DATE	STEP	PROCEDURE CHANGE	By	Date	Qty	Approval Chief Eng / Prod Mgr	Approval QC Inspector

Part No: _____ **PAR #:** _____ **Fault Category:** _____ **NCR:** Yes No **DQA:** _____ **Date:** _____

Resolution: _____ **Disposition:** _____ **QA: N/C Closed:** _____ **Date:** _____

NCR:		WORK ORDER NON-CONFORMANCE (NCR)						
DATE	STEP	Description of NC Section A	Corrective Action Section B			Verification Section C	Approval Chief Eng	Approval QC Inspector
			Initial Chief Eng	Action Description Chief Eng	Sign & Date			

NOTE: Date & initial all entries

Picklist Print

Tuesday, March 29, 2011 11:16:40 AM

Work Order ID: 67678

Parent Item: D3197-041

Parent Item Name: Bar Assembly

Start Date: 3/29/2011 **Required Date:** 4/1/2011

Start Qty: 4.00 **Required Qty:** 4.00

M7075T73R1.000	Purchased	No	180	f	40.6150	2.42	12.1	
7075-T73 Rd Bar 1.00								

Location	Loc Qty	Loc Code	
MAT012	40.615		
115165	2.7		
116405	4.54		
116604	2.25		
116835	12		
✓116962	19.125		9.7500 ft A.A 11/04/05

MS21042L3	Purchased	No	180	Each	2,189.000	2	8	11/04/18
Nut								

Location	Loc Qty	Loc Code	
ST300	2189		
116391	589		8
116540	800		
116549	800		

Dart Aerospace Ltd

W/O:		WORK ORDER CHANGES					
DATE	STEP	PROCEDURE CHANGE	By	Date	Qty	Approval Chief Eng / Prod Mgr	Approval QC Inspector

Part No: _____ **PAR #:** _____ **Fault Category:** _____ **NCR:** Yes No **DQA:** _____ **Date:** _____

Resolution: _____ **Disposition:** _____ **QA: N/C Closed:** _____ **Date:** _____

NCR:		WORK ORDER NON-CONFORMANCE (NCR)						
DATE	STEP	Description of NC Section A	Corrective Action Section B			Verification Section C	Approval Chief Eng	Approval QC Inspector
			Initial Chief Eng	Action Description Chief Eng	Sign & Date			

NOTE: Date & initial all entries

DART AEROSPACE LTD	Work Order:	67678
Description: Bar	Part Number:	D3197-1
Inspection Dwg: D3197 Rev: B		Page 1 of 1

FIRST ARTICLE INSPECTION CHECKLIST

[X] First Article [ ] Prototype

Drawing Dimension	Tolerance	Actual Dimension	Accept	Reject	Method of Inspection	Comments
29.00	+/-0.030	29.016	✓		Tape	GA - 12
25.06	+/-0.030	25.076	✓		Tape	GA - 12
11.44	+/-0.030	11.456	✓		Vern	CNC-02
0.500	+/-0.010	0.500	✓		Vern	GA-01
0.250	+/-0.030	0.266	✓		"	"
Ø0.219	+0.005/-0.000	Ø0.220	✓		"	"
Ø0.191	+0.005/-0.000	Ø0.193	✓		"	"
1.000	+/-0.005	0.999	✓		"	"
2.69	+/-0.030	2.690	✓		"	"
1.000	+/-0.010	1.000	✓		"	"
0.300	+/-0.010	0.303	✓		"	"
0.063 x 45°	+/-0.010	0.065x45°	✓		"	"
Ø1.000	+/-0.010	0.999	✓		"	"

Measured by:	B.A	Audited by:	[illegible]	Prototype Approval:	N/A
Date:	11/04/05	Date:	11/04/06	Date:	N/A

Rev	Date	Change	Revised by	Approved
A	04.04.20	New Issue (P/O D3197-041)	KJ/JLM	
B	07.03.09	Dwg revision update	KJ/JLM	[illegible]

Dart Aerospace Ltd

W/O:		WORK ORDER CHANGES					
DATE	STEP	PROCEDURE CHANGE	By	Date	Qty	Approval Chief Eng / Prod Mgr	Approval QC Inspector

Part No: _____ **PAR #:** _____ **Fault Category:** _____ **NCR:** Yes No **DQA:** _____ **Date:** _____

Resolution: _____ **Disposition:** _____ **QA: N/C Closed:** _____ **Date:** _____

NCR:		WORK ORDER NON-CONFORMANCE (NCR)						
DATE	STEP	Description of NC Section A	Corrective Action Section B			Verification Section C	Approval Chief Eng	Approval QC Inspector
			Initial Chief Eng	Action Description Chief Eng	Sign & Date			

NOTE: Date & initial all entries

H:\fFORMS\Quality Assurance\approved QA\NCRWO RevE

SHOP COPY
RETURN TO
ENGINEERING
UNCONTROLLED COPY
SUBJECT TO AMENDMENT
WITHOUT NOTICE
WORK ORDER
NO. 62628

RELEASED
06.03.21
ECN 32

D3489-3-200 PIP PIN (1)
D3242-1 TAG (1)
MS27039-1-24 BOLT (1)
AN960JD10 WASHER (1)
D2690-5 LANYARD (1)
AN960JD10 WASHER (1)
BAR (REF)
AN960JD10 WASHER (1)
MS21042L3 NUT (1)
(2 PLACES)

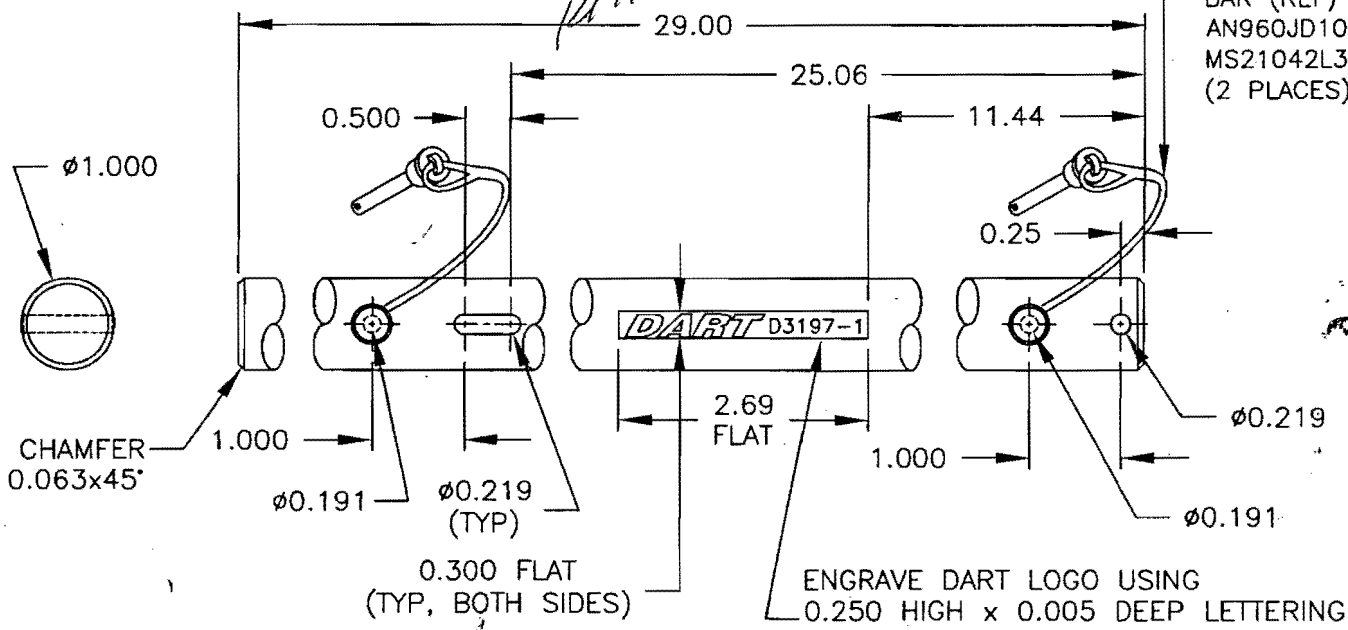

D3197-041 BAR ASSEMBLY

D3197-1 BAR

1) MATERIAL: 7075-T73 ROUND BAR (QQ-A-200/11 or QQ-A-225/9) ø1.000 O.D.
   (REF DART SPEC. M7075T73R1.000)
2) FINISH: CHEMICAL CONVERSION COAT PER DART QSI 005 4.1
   POWDER COAT SANDTEX (4.3.5.6) PER DART QSI 005 4.3
3) TOLERANCES ARE PER DART QSI 018 UNLESS OTHEWISE NOTED
4) ALL DIMENSIONS ARE IN INCHES
5) FOR TOOLING, IT IS ACCEPTABLE TO HAVE A 0.06 DEEP x 60° CENTER MARK AT EITHER END OF THE BAR

REV.	DATE	DESCRIPTION
A	03.07.01	NEW ISSUE
B	06.01.10	CHG PIP PIN; ADD D3242-1 TAG

DESIGN: CP | DRAWN BY: CP | CHECKED | APPROVED | DATE: 06.01.10

DART AEROSPACE LTD
HAWKESBURY, ONTARIO, CANADA

DRAWING NO. D3197 | REV. B | SHEET 1 OF 1
TITLE: BAR | SCALE: 1:1

Dart Aerospace Ltd

W/O:		WORK ORDER CHANGES					
DATE	STEP	PROCEDURE CHANGE	By	Date	Qty	Approval Chief Eng / Prod Mgr	Approval QC Inspector

Part No: _____ **PAR #:** _____ **Fault Category:** _____ **NCR:** Yes No **DQA:** _____ **Date:** _____

Resolution: _____ **Disposition:** _____ **QA: N/C Closed:** _____ **Date:** _____

NCR:		WORK ORDER NON-CONFORMANCE (NCR)						
DATE	STEP	Description of NC Section A	Corrective Action Section B			Verification Section C	Approval Chief Eng	Approval QC Inspector
			Initial Chief Eng	Action Description Chief Eng	Sign & Date			

NOTE: Date & initial all entries

H:\FORMS\Quality Assurance\approved QA\NCRWO RevE